meaning low NF and high IMD performance, while at the same time keeping cost and power consumption to a minimum.

The Datong AD270/370 Active Dipole Antenna

One of the more popular commercially available active dipole antennas was the Datong AD270 and AD370, the former intended for indoor useage and the latter for outdoor. The amplifier consisted of a balanced JFET input stage using transformer-couple drain-to-source feedback, followed by a pair of bipolar transistor amplifiers using transformer-coupled collector-to-emitter feedback and then a balanced-to-unbalanced (BalUn) transformer. DC power for the antenna was conducted through the coaxial cable feedline. The overall design of the amplifier shows that a good amount of attention was given to both NF and IMD performance, however it does have a somewhat critical flaw.

The JFET input stage is shown in abbreviated form in Fig. 1. The two antenna elements are connected to the JFET gates through a series of coupling capacitors together with some static voltage suppression circuitry, which, together with other details is not shown here for reasons of clarity. The transformer provides a means of drain-to-source negative feedback, a configuration that was made popular by Burhans (1, 2) as well as others (3, 4)

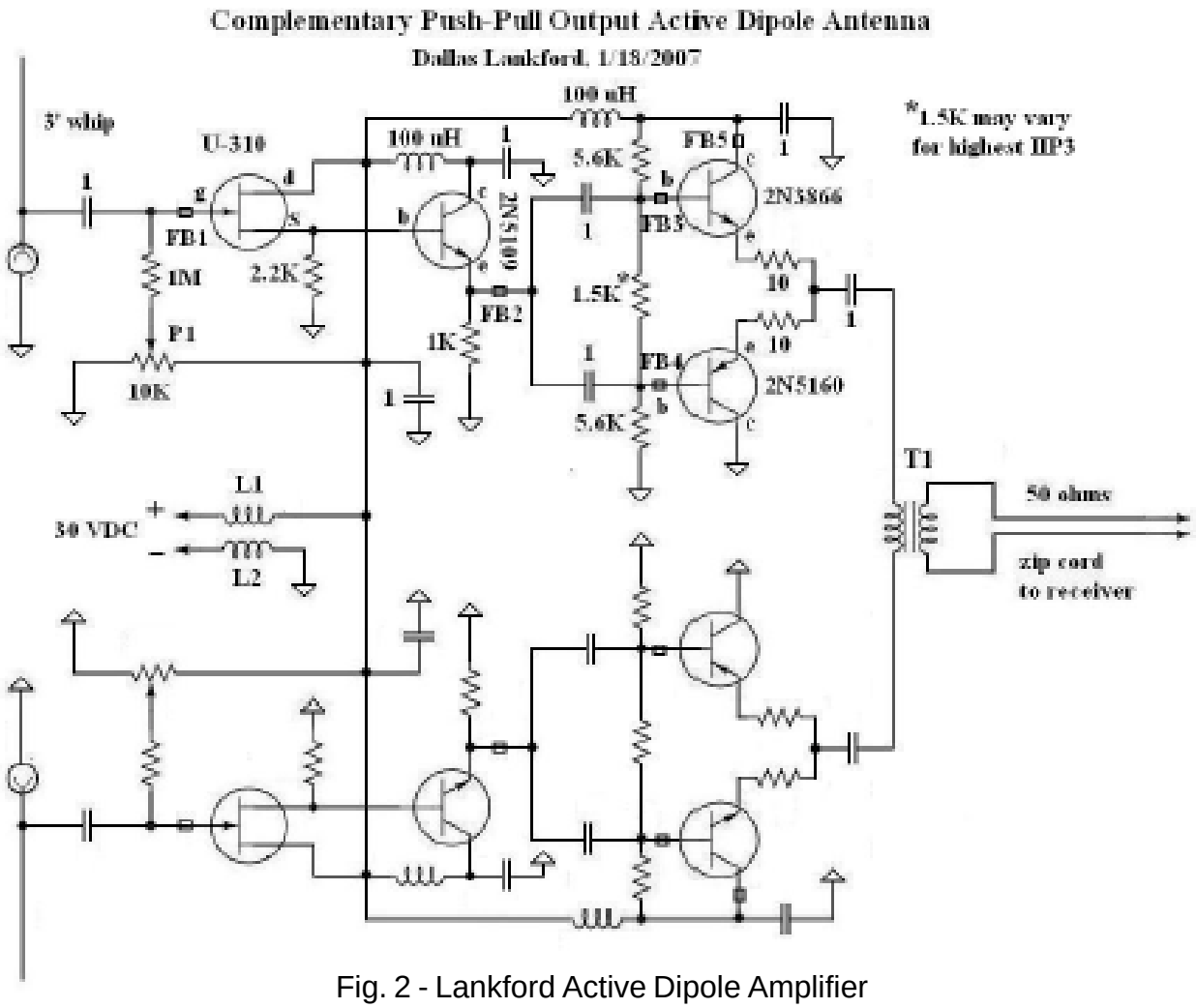

Fig. 2 - Lankford Active Dipole Amplifier